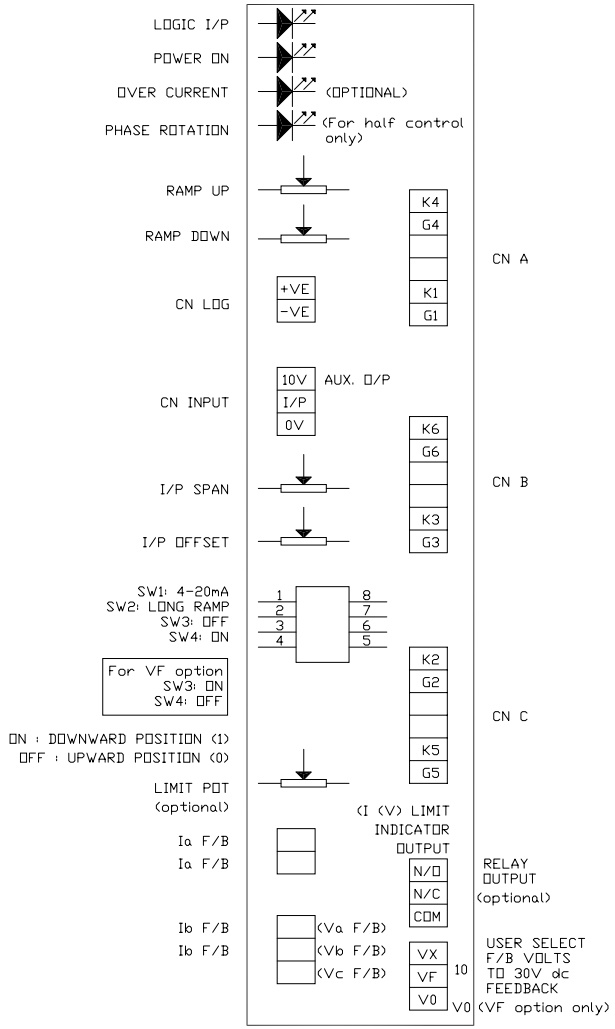


340 & 350 PANEL LAYOUT

FIG. 1

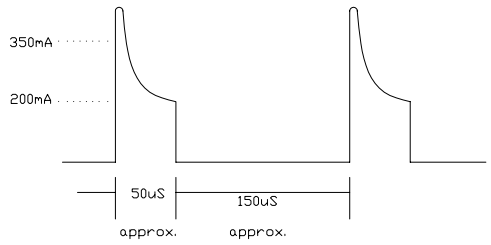


THYRISTOR GATE PULSES CURRENT WAVEFORM WITH A 10 OHMS LOAD

FIG. 2

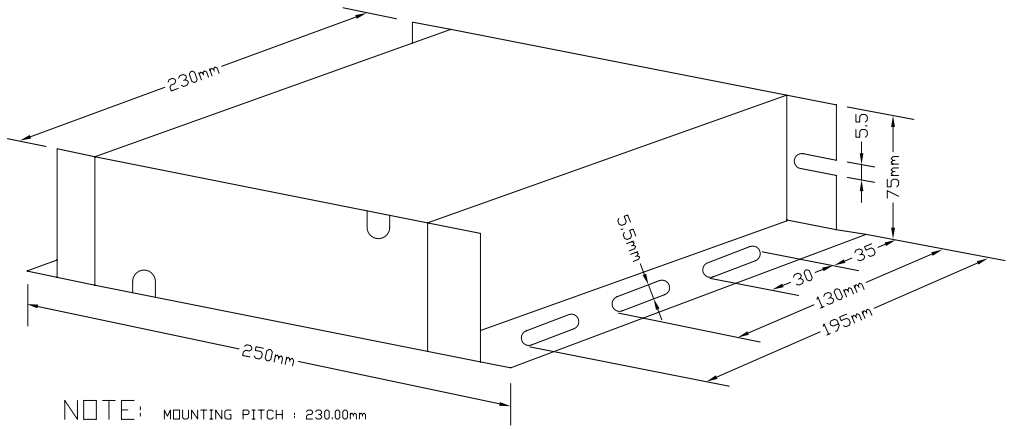


NOTE: MOUNTING PITCH : 230.00mm

FIG. 3 ENCLOSURE FOR SKPC340/350

P.6

| | | | | | | | |
|---|---|---|---|---|---|---|---|
| POWERLINK ELECTRONICS LTD. | DESIGNED BY | | DATE | | CLIENT | TITLE | |
| | DRAWN BY | | DATE | JULY 2002 | | 340 & 350 INS. FIG.1 & 3 | |
| | CHECKED BY | | DATE | | | | |
| | APPROVED BY | | DATE | | PROJECT No: | A3 | DRAWING No: CD6060B R |
| ISSUE / AMENDMENT / MADE BY / DATE | SCALE: | | SHEET : | | | | |