FIG. 7 B63 WIRING DIAGRAM

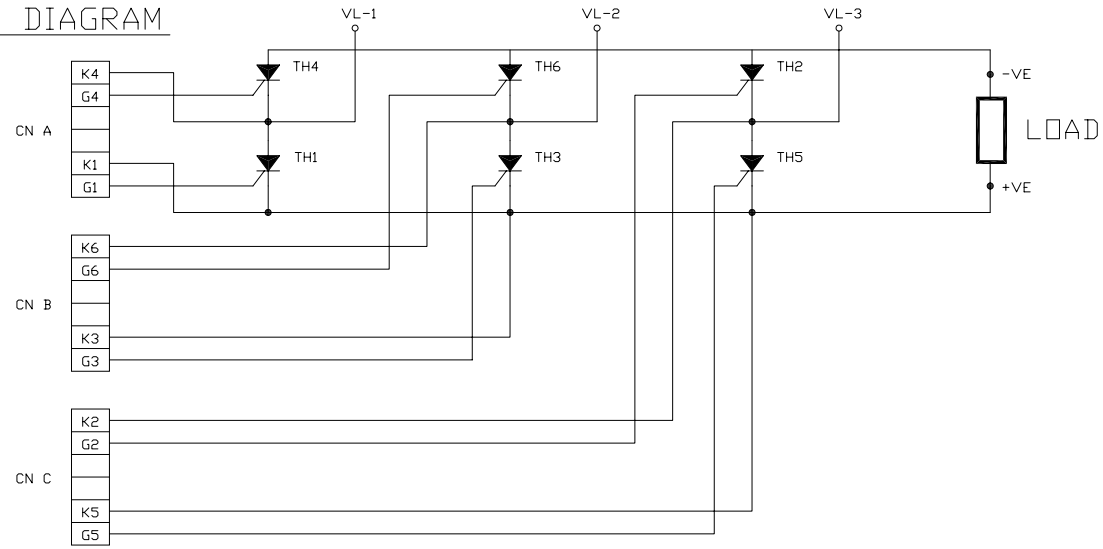

FIG. 8 B6HK WIRING DIAGRAM

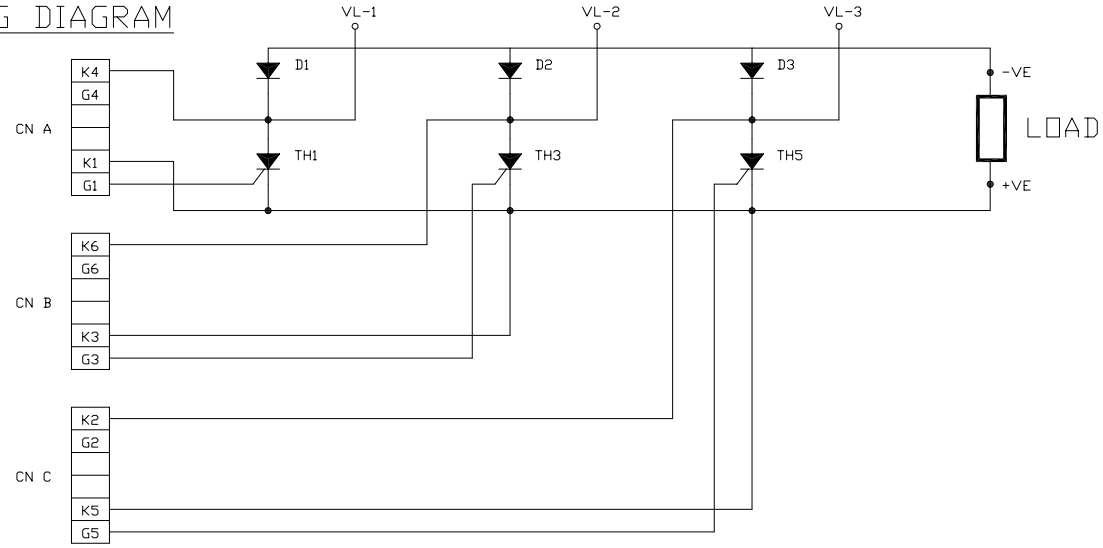

P.9

POWERLINK ELECTRONICS LTD.	DESIGNED BY		DATE		CLIENT	TITLE PC340 OR SKP340 B6C & B6HK WIRING DIAGRAM	
	DRAWN BY		DATE	21 JULY 2002			
	CHECKED BY		DATE				
	APPROVED BY		DATE		PROJECT No:	A3	DRAWING No: CD6062A R
ISSUE / AMENDMENT / MADE BY / DATE	SCALE:		SHEET :				